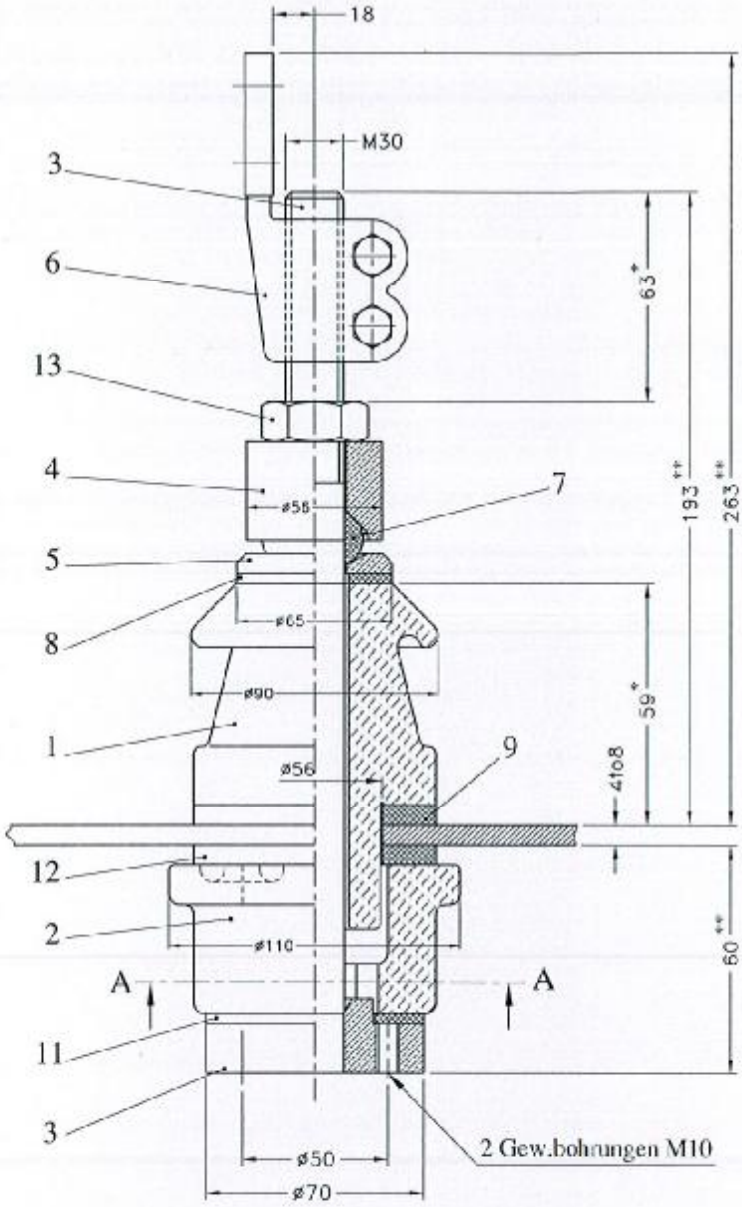

Weight	Creepage distance
3.9	75
* : Minimum Size	
** : Maximum Size	

Uncertain tolerances according to DIN ISO 2768-m

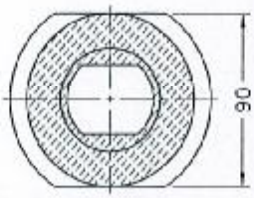

Section : A-A

Index	Mod No.	Date	Modifications	Signature	Tittle:
					Bushing DT1/1000
					Ordered by:

Tolerance:	Group:	Applied by:	Drawing Identification: 1 T R I - - R 1 1
Scale: --		Check by: Badrkhani	Drawing No.: 4IT-Z004700
شرکت ترانسفورماتور توزیع زنگان ZANGAN DISTRIBUTION TRANSFORMER CO.		Approved by: Karamzadeh	Date: 1400/03/22 · Page.Count No.: · Page No.: 1+

A4

Attachments:

Substitued of:

PDF created with pdfFactory Pro trial version www.pdffactory.com

Attachments:

Substitued of:

Uncertain tolerances according to DIN ISO 2768-m

QL.	Item No. / Index	Description	Identity No.	Material / Standard	Dimension	Mass. Kg
1	13 / –	Brass nut DIN 934(DIN EN ISO 8573)		Ms-60	M30x2	
1	12 / –	Internal gasket X	ND OH 06 034		Nr.1	
1	11 / –	Internal gasket R	ND OH 06 033		Nr.1	
–	10 / –	Internal gasket				
1	9 / –	Flange gasket	ND OH 06 031		N-87x54-4	
1	8 / –	Plain gasket	ND OH 06 032		M1-62x31-4	
1	7 / –	Ring gasket	ND OH 06 029		J1-45x30-16	
1	6 / –	Flag	4IT-Z004700/3-		DT1/1250	
1	5 / –	Washer G1	ND OH 06 027		G1-1000	
1	4 / –	Washer E	ND OH 06 028		F -1000	
1	3 / –	Brass stem	ND OH 03 036		Z -1000	
1	2 / –	Bottom porcelain DIN 42530			B -1000	
1	1 / –	Top porcelain DIN 42530			A1-1000	

Index	Mod No.	Date	Modifications	Signature

Tittle: Bushing DT1/1000 Part List

Ordered by:

Tolerance:

Scale: – –

Group:

Applied by:

Check by: Badrkhani

Approved by: Karamzadeh

Drawing Identification: I T R 1 – – R 1 1

Drawing No.: 4IT-Z004700

Date: 1400/03/22

Page.Count No.:

Page No.: 2+

شرکت ترانسفورماتور توزیع زنگان
ZANGAN DISTRIBUTION TRANSFORMER CO.

A4

PDF created with pdfFactory Pro trial version www.pdffactory.com

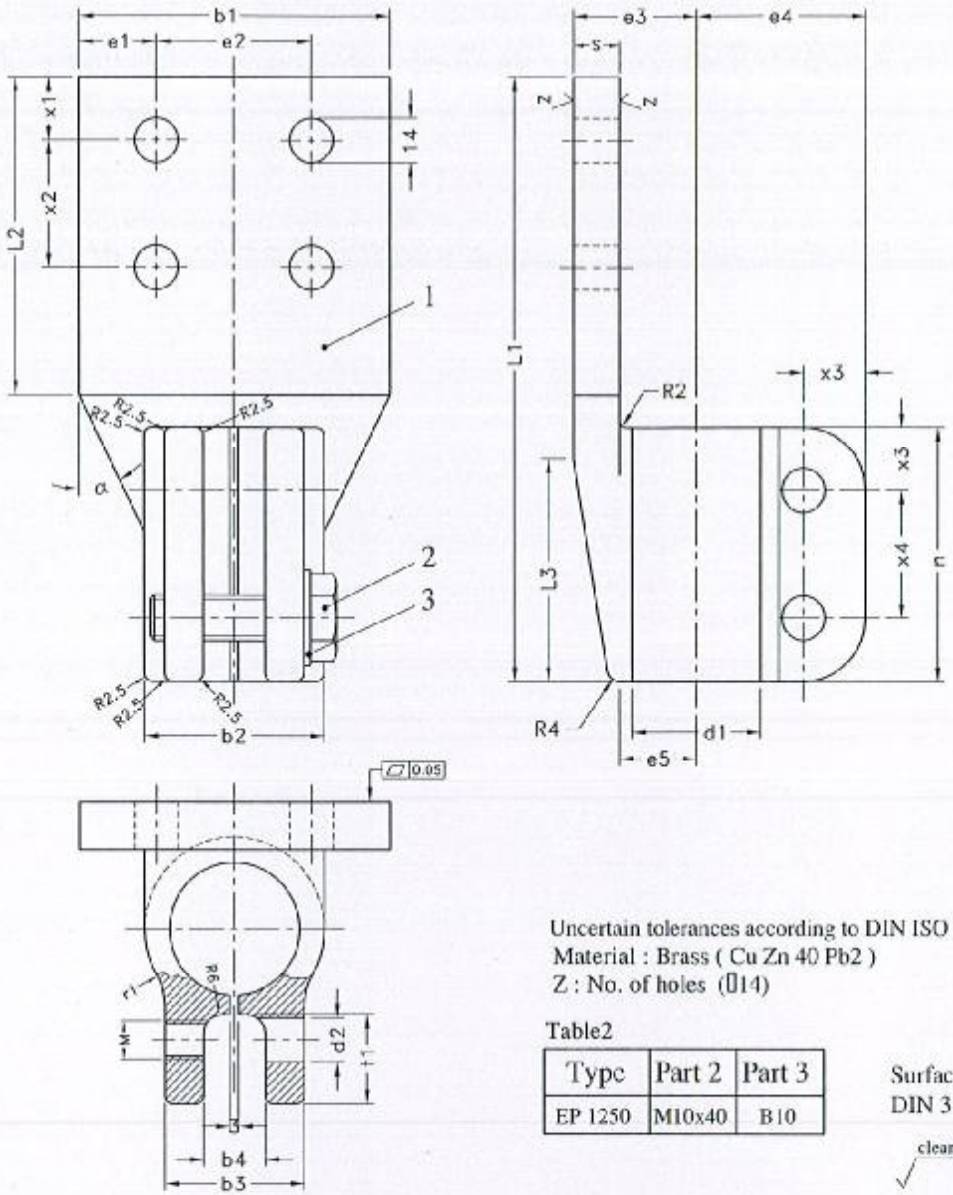

Uncertain tolerances according to DIN ISO 2768-m
Material : Brass (Cu Zn 40 Pb2)
Z : No. of holes (⌀14)

Table2

Type	Part 2	Part 3
EP 1250	M10x40	B10

Surface finish
DIN 3141 (Reihe 1)

cleaned ✓ (Z/ = ✓ lathed Rz 40 / Rz 25)

Table1

Type	b1	b2	b3	b4	d1	d2	e1	e2	e3	e4	e5	x1	x2	x3	x4	n	L1	L2	L3	M	α	r1	t1	s	Z
EP 1250	60	45	36	16	M30x2	⌀12	14	32	28	40	19	14	32	15	30	60	130	60	52	M10	15°	15	22	10	4

Attachments:

Substitued of:

Qt.	Item No. / Index	Description	Identity No.	Material / Standard	Dimension	Mass. Kg
2	3 / –	Spring washer DIN 127		A2-70	acc.to table2	
2	2 / –	Hex. bolt DIN 933-8.8(DIN EN ISO 4017)		A2-70	acc.to table2	
1	1 / –	Flag DIN 43675		Cu Zn40 Pb2 F / DIN 43675		

Index	Mod No.	Date	Modifications	Signature

Tittle: Bushing Flag (1250A)

Ordered by:

Tolerance:

Scale: – –

Group:

Applied by:

Check by: Badrkhani

Approved by: Karamgadeh

Drawing Identification: I T R I – – R 1 1

Drawing No.: 4IT-Z004700

Date: 1400/03/22

Page.Count No.:

Page No.: 3–

شرکت ترانسفورماتور توزیع زنگان
ZANGAN DISTRIBUTION TRANSFORMER CO.

A4

PDF created with pdfFactory Pro trial version www.pdffactory.com